REV	ECN NO.	DESCRIPTION	DRN	APPD	DATE

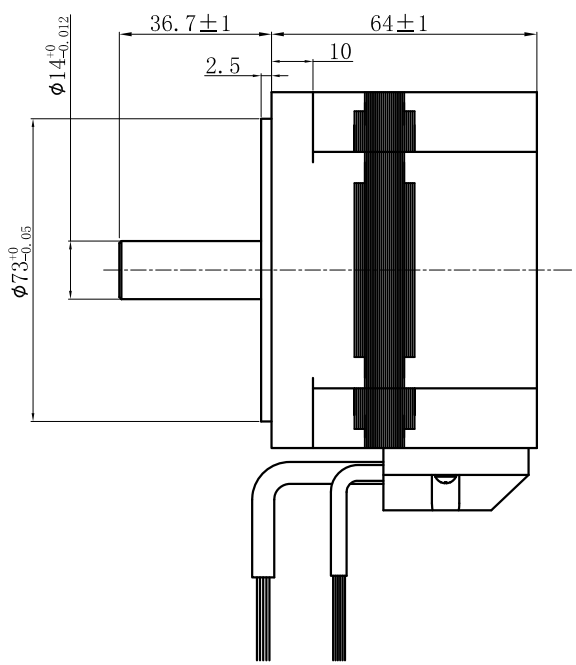

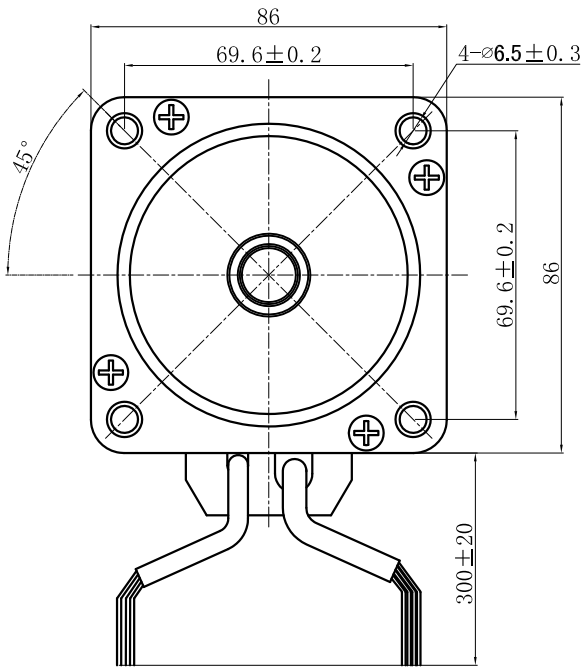

CW COMMUTATION
VIEWED FROM OUTPUT SHAFT

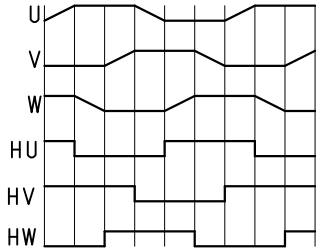

NUMBER OF PHASE	绕组相数	3
NUMBER OF POLES	极数	8
LINE TO LINE RESISANCE	线电阻	1±10% ohms@20℃
LINE TO LINE INDUCTANCE	线电感	1.4±20% mH@1kHz
NOMINAL VOLTAGE	额定电压	48 VDC
NO LOAD SPEED	空载转速	3400 RPM
NO LOAD CURRENT	空载电流	<1 A
RATED TORQUE	额定转矩	0.4 N.m
RATED SPEED	额定转速	3000 RPM
RATED CURRENT	额定电流	3.3 A
PEAK TORQUE	峰值转矩	1.2 N.m
PEAK CURRENT	峰值电流	10 A
BACK EMF CONSTANT	反电势常数	9 Vrms/kRPM
TORQUE CONSTANT	转矩常数	0.122 N.m/A
INSULATION CLASS	绝缘等级	B 130℃
DIELECTRIC STRENG	介电强度	1200VAC 1SEC
INSULATION RESIST	绝缘电阻	100MOhm @500VDC
ROTOR INERTIA	转子转动惯量	400 g.cm²
WEIGHT	重量	1.5 Kg
OPERATION AMBIENT	使用环境	Ambient temperature:-20...+50° C,humidity Max. 85%(No condensation)
STORAGE AMBIENT	存储环境	Ambient temperature:-20...+85° C,humidity Max. 85%(No condensation)

Wires for Phases AWG16		
PHASE U	PHASE V	PHASE W
YEL	RED	BLK

Wires for HALL AWG24				
HALL Vc	Hu	Hv	Hw	HALL Gnd
RED	BLU	GRN	WHT	BLK

PERMISSIBLE RADIAL+AXIAL FORCE

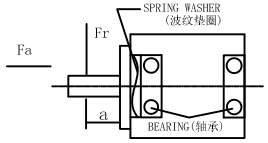

AXIAL-FORCE	轴向压力	Fa=10 N Max
DISTANCE	距离	a=10 mm
RADIAL-FORCE	径向压力	Fr=28 N Max
SHAFT RADIAL PLAY	径向间隙	0.02mm Max.@4N
SHAFT AXIAL PLAY	轴向间隙	0.14mm Max.@4N

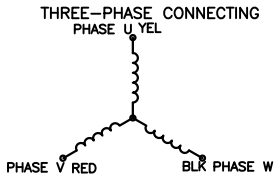

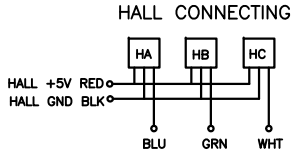

REV	ECN NO.	DESCRIPTION	DESIGN	DATE	P/N.
UNLESS OTHERWISE SPECIFIED TOLERANCES DECIMALS: .x ±0.5 .xx ±0.25 .xxx ±0.1 ANGULAR: ±0° 30'	MATERIAL	CONTR	CHECK		TITLE: Specifications
			APPD		USED ON: FL86BLC64
UNIT: mm DO NOT SCALE DRAWING	FIRST ANGLE PROJECTION		SCALE 1:1		DWG NO. / REV A
			SHEET 1 OF 1		FULLING MOTOR